NWV T-Trak Modules Physical Set Up

- Double-wide row of modules are typically placed on a double-wide row of 30-inch-wide banquet tables, so modules are centered about 16 inches from table edges to reduce reaching in by small children.
- Select tables all of the same height. Place table edges together of the same height as much as possible.
- Place all modules on tables and check alignments before joining modules together.
- Most modules have screw-adjustable legs. If not, use cardboard shims in parts box to raise module edges to the same height.
- If the inner corner modules are used, one or two of the custom-length 1x modules must be used to obtain proper alignments, see following diagrams.

NWV T-Trak Modules Physical Set Up

- Use of Custom 1x modules with one inner corner module.

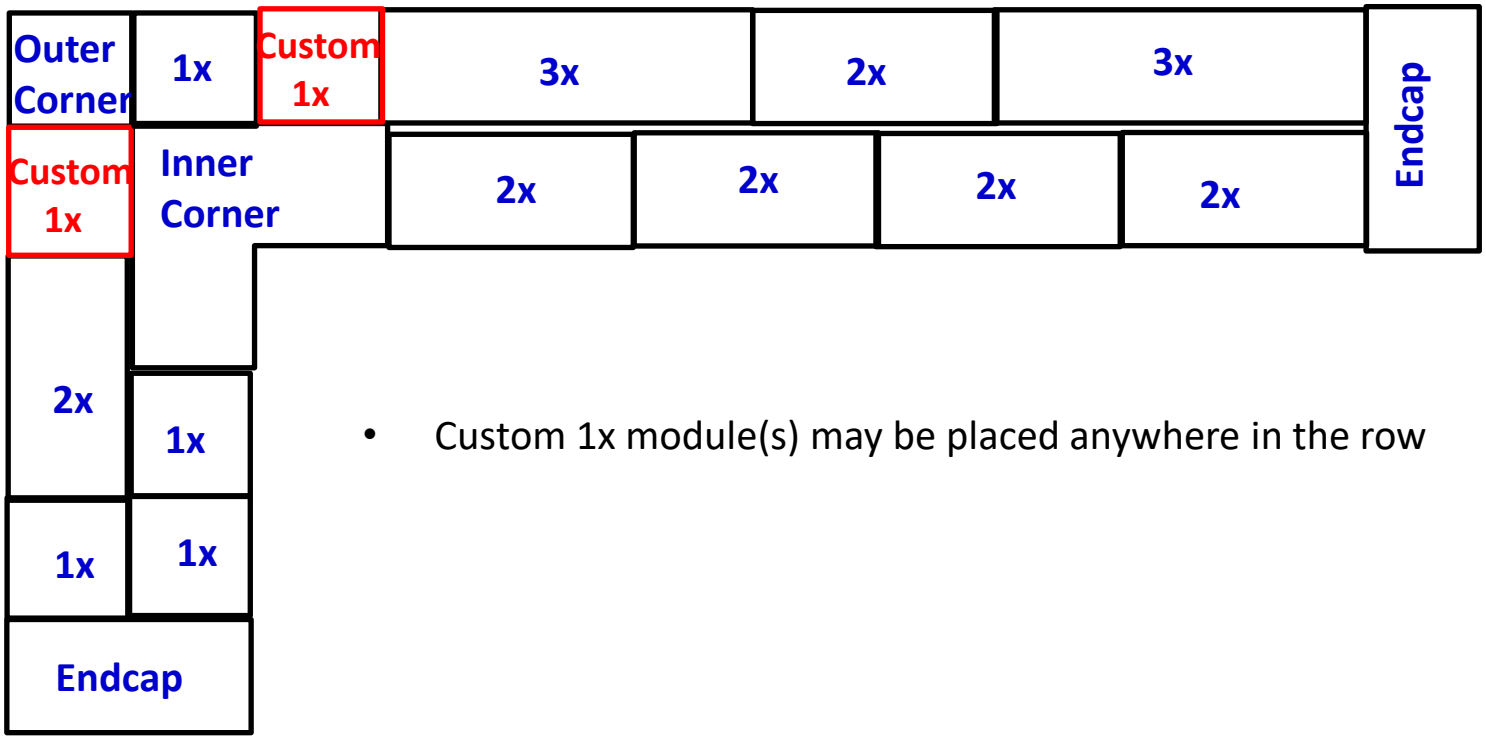

- Custom 1x module(s) may be placed anywhere in the row

NWV T-Trak Modules Physical Set Up

- Use of Custom 1x modules with two inner corner modules.

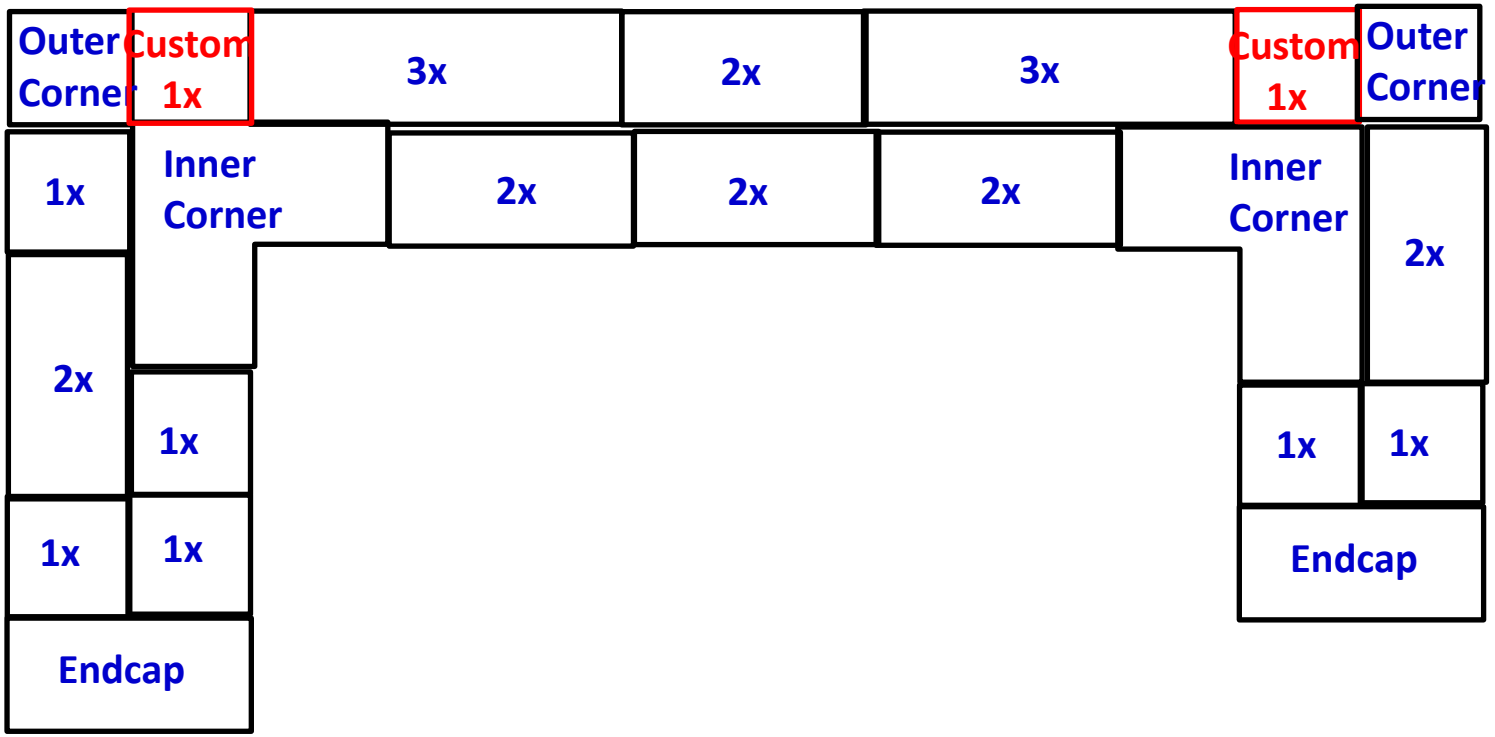

- Custom 1x module(s) may be placed anywhere in the row
- There will be a small gap between the rows of the center section
- Do not need Custom 1x modules in the two legs

NWV T-Trak Modules Physical Set Up

- Use of Custom 1x modules with two inner corner modules.

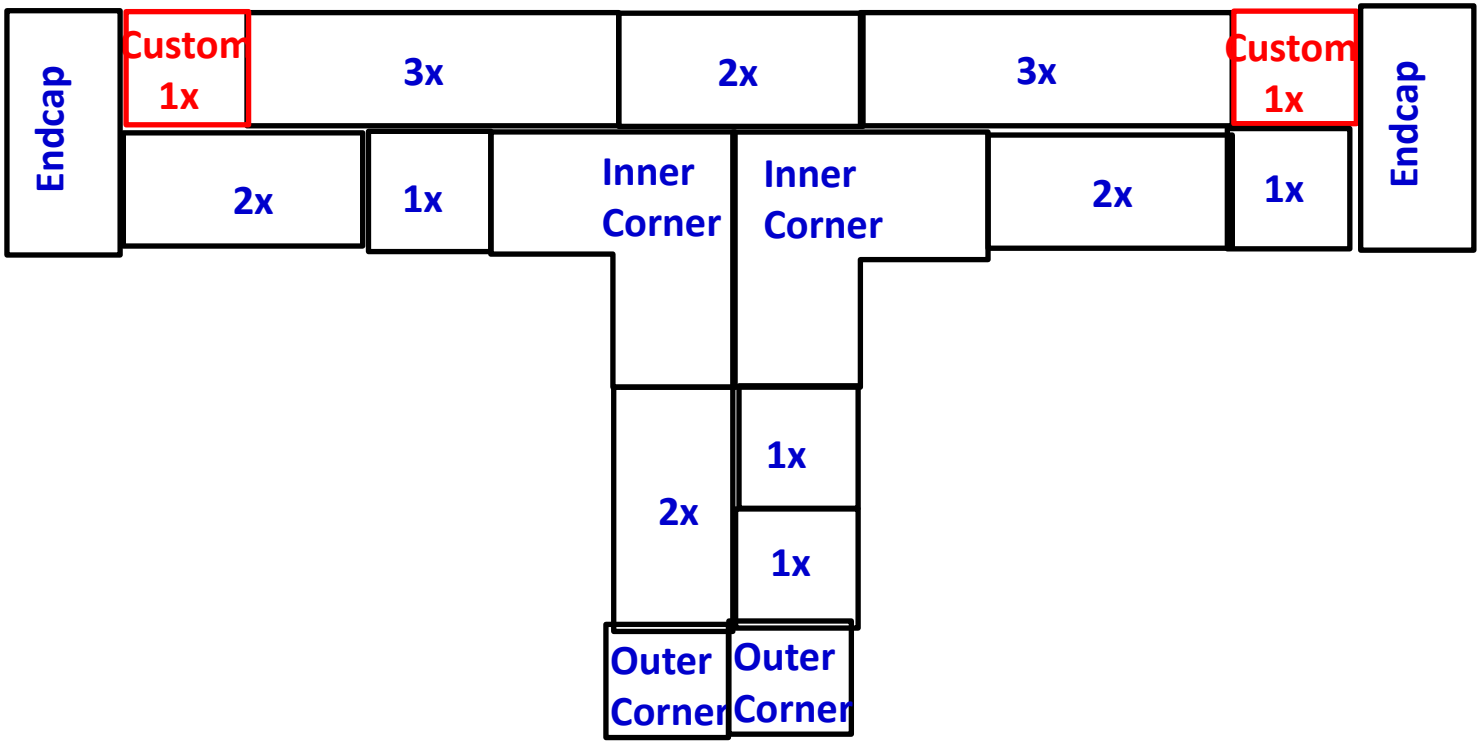

- Custom 1x module(s) may be placed anywhere in the row

NWV T-Trak Modules Track Power Connections

- NWV modules wiring uses Kato blue/white modular connectors for all track power connections and follows the original (DC) T-Trak wiring standard
- They could be used for DC operation, though unlikely
- The NCE DCC interface board criss-crosses the blue/white connections of the Inner and Outer mainlines to have consistent polarity when double-crossover modules are used between the two main line tracks. See wiring diagram on following page.
- One Power Cab throttle and up to three Pro Cab throttles can be used for NWV display layouts
-
- One NWV end cap module has red/yellow wiring connectors that can be used to connect to other DCC (Digitrax) T-Trak modules
- We may add red/yellow wiring to other modules in the future

NWV T-Trak Modules Track Power Connections

Note:

Inner Blue = Outer White

Inner White = Outer Blue

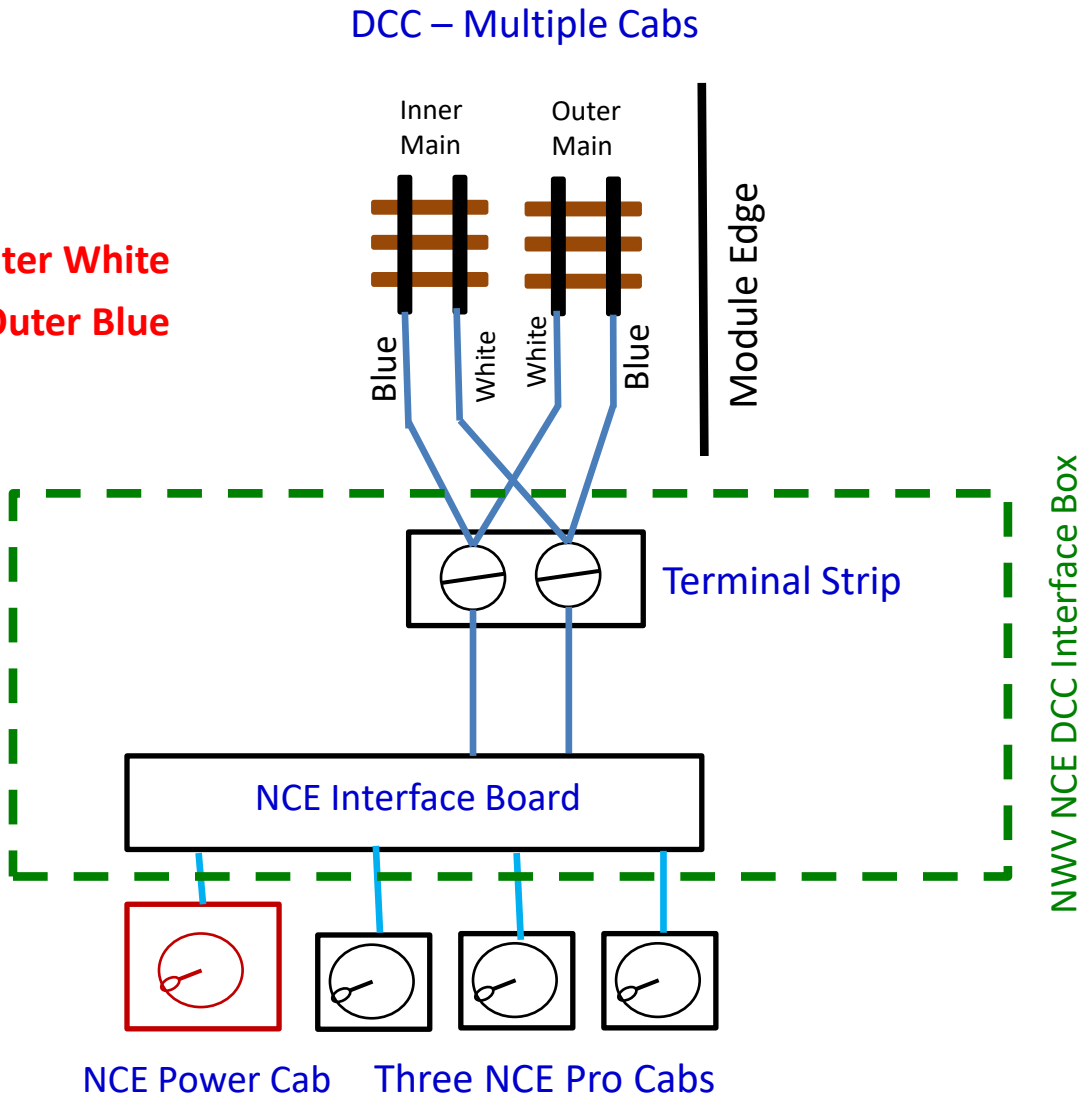

NWV T-Trak Modules Track Power Connections

One Power Cab and one Pro Cab jack on face of Interface Board
Two Pro Cab jacks on rear of Interface Board
Power supply plugs into rear of Interface Board



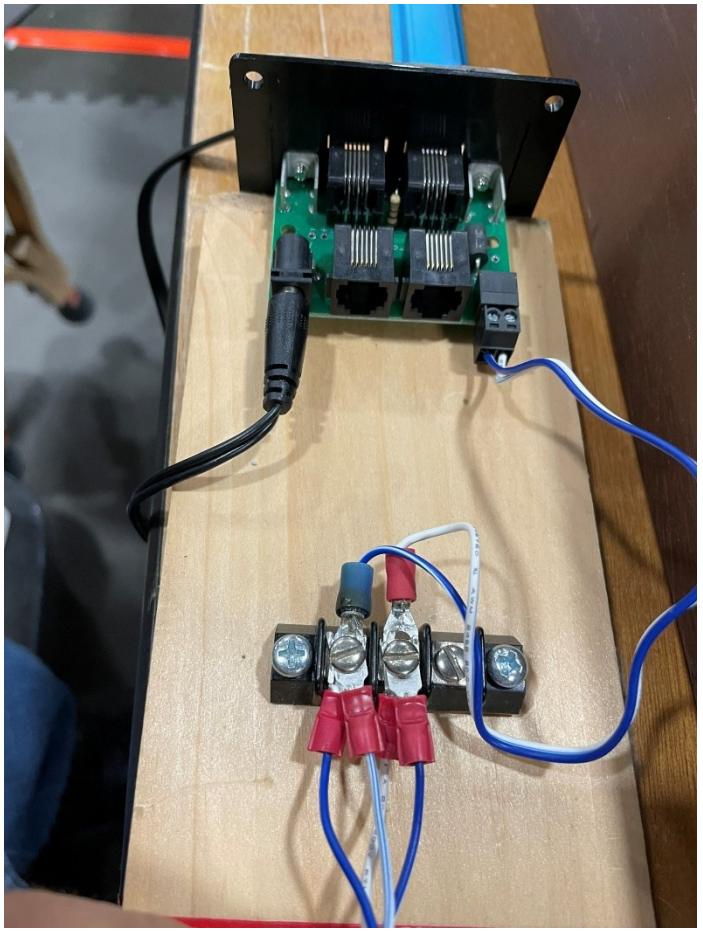

NWV T-Trak Modules Track Power Connections

- Connect the two power connectors on the NCE Interface Board to all the power drops on all of the modules using the three-to-one splitters to daisy-chain them all together.
- It may not be necessary to connect all modules if connecting cords are in short supply – Kato Unitrack has good connectivity through the rail joiners. Connect to the furthest modules, but maybe not to all 1x length modules along the way.
- The power buses for the Inner and Outer Main loop tracks must be kept separate.
- **Do Not** connect the Inner Blue to the Outer Blue or the Inner White to the Outer White – this will appear to work okay, but will cause electrical shorts if a double-cross-over module is used.
- There are jumper wires built into the NWV 1x cross-over modules. Do not disconnect them or connect them to the main power bus directly.

NWV T-Trak Modules Lighting Power Connections

- The LED lights on the modules are powered from a 9 volt, 1 amp supply, connected to the modules through ¼-inch, mono audio cables.
- The wiring convention is: Positive voltage is on the tip of the plug, negative voltage is on the outer shank of the plug.
- The power supply goes to a ¼-inch female jack. Connect cables and Y-connecters to the output, daisy-chained as needed to provide power to those modules with lights and a ¼-inch male plug.

NWV T-Trak Modules Take Down

- Remove ALL rolling stock from the layout before beginning disassembly.
- Power down the NCE track power system and disconnect the NCE Interface Board and the track power bus cables from the layout and store them in the power busing box.
- Power down the lighting power supply, remove the lighting connection cables and store all in the lighting power bus box.
- Make sure that all power bus wires have been disconnected before pulling modules apart!
- To separate the modules, insert a flat-blade screwdriver between them and gently pry them apart.
- Secure the modules for transport, making sure that all scenery will be protected from damage.